Light LUXURY ILLUMINATED BATHROOM MIRRORS

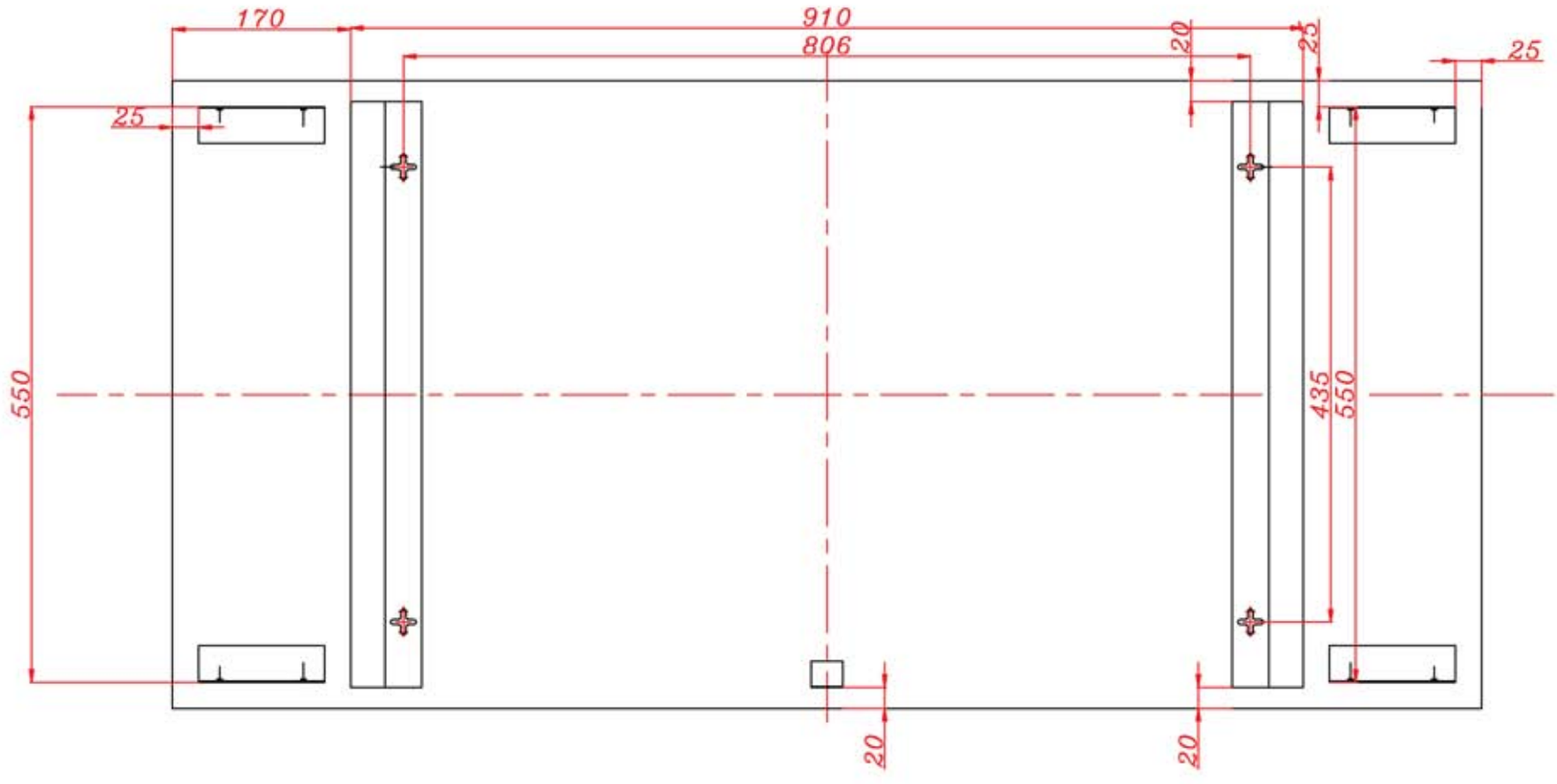


# Fitting Diagram - Model: 584

Illuminated LED Bathroom Mirror Star LED Range - 600 x 1250 x 45 mm
48 x 0.1w LED lights - Motion Sensor - Demister - 240v Shaving socket
IP44 Rated for bathroom zones 2 and 3

For fitting advice from our experts please call **0845 164 9026**
or email us at **sales@lightmirrors.co.uk**